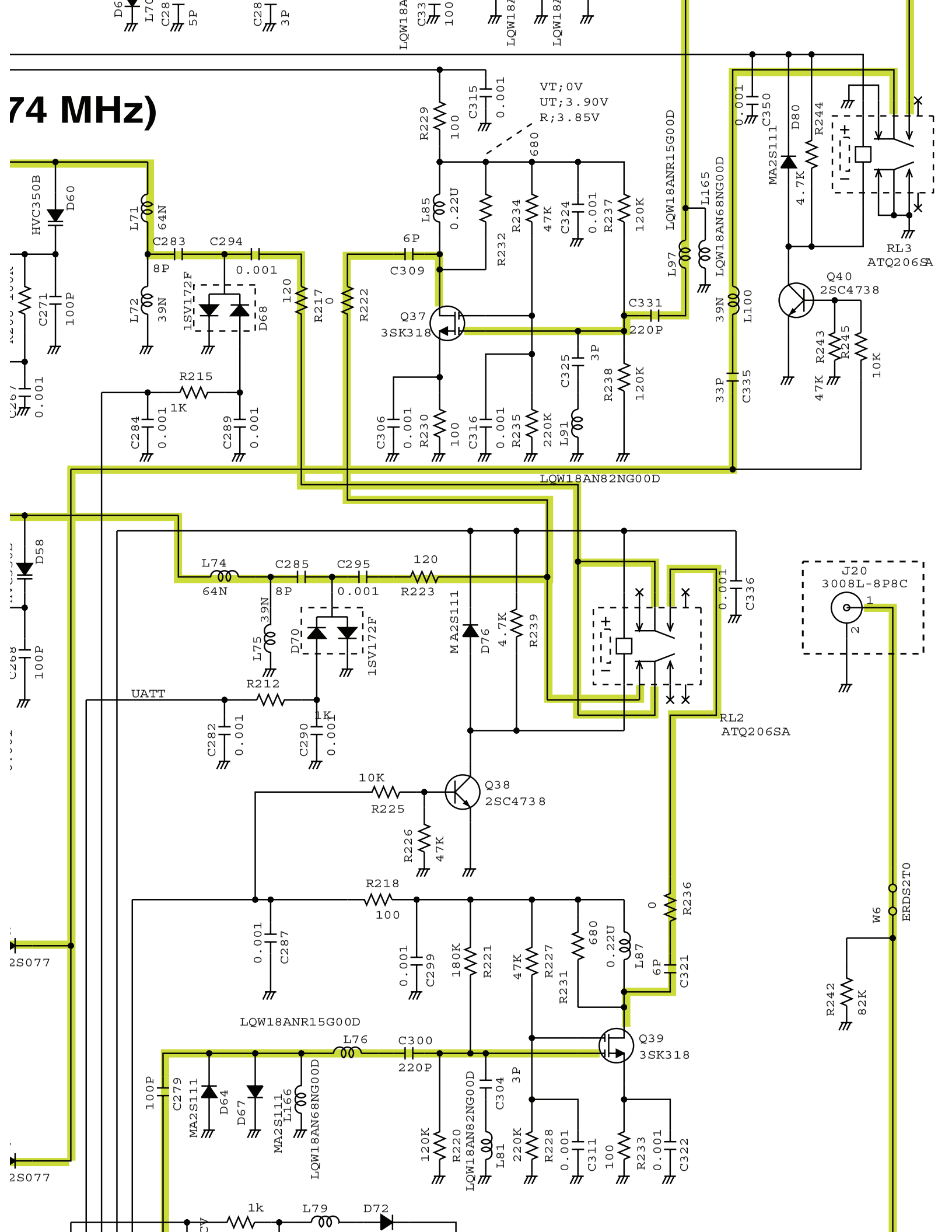
74 MHz)
VT;0V
UT;3.90V
R;3.85V
HVC350B
D60
L71
64N
C283
C294
8P
0.001
L72
39N
1SV172F
D68
120
R217
0
R222
C271
100P
R215
1K
C284
0.001
C289
0.001
R229
100
C315
0.001
L85
0.22U
R232
R234
47K
680
C324
0.001
R237
120K
6P
C309
Q37
3SK318
C331
220P
C325
3P
R238
120K
C306
0.001
R230
100
C316
0.001
R235
220K
L91
L97
LQW18ANR15G00D
L165
LQW18AN68NG00D
39N
L100
33P
C335
LQW18AN82NG00D
0.001
C350
MA2S111
D80
4.7K
R244
RL3
ATQ206SA
Q40
2SC4738
R243
47K
R245
10K
D58
L74
64N
C285
8P
C295
0.001
120
R223
39N
L75
D70
1SV172F
MA2S111
D76
4.7K
R239
0.001
C336
J20
3008L-8P8C
1
2
UATT
R212
1K
C282
0.001
C290
0.001
RL2
ATQ206SA
10K
R225
Q38
2SC4738
R226
47K
R218
100
0.001
C287
0.001
C299
180K
R221
47K
R227
680
R231
0.22U
L87
6P
C321
0
R236
W6
ERDS2T0
R242
82K
LQW18ANR15G00D
L76
C300
220P
Q39
3SK318
100P
C279
MA2S111
D64
D67
MA2S111
L166
LQW18AN68NG00D
120K
R220
LQW18AN82NG00D
C304
3P
L81
220K
R228
0.001
C311
100
R233
0.001
C322
1k
L79
D72